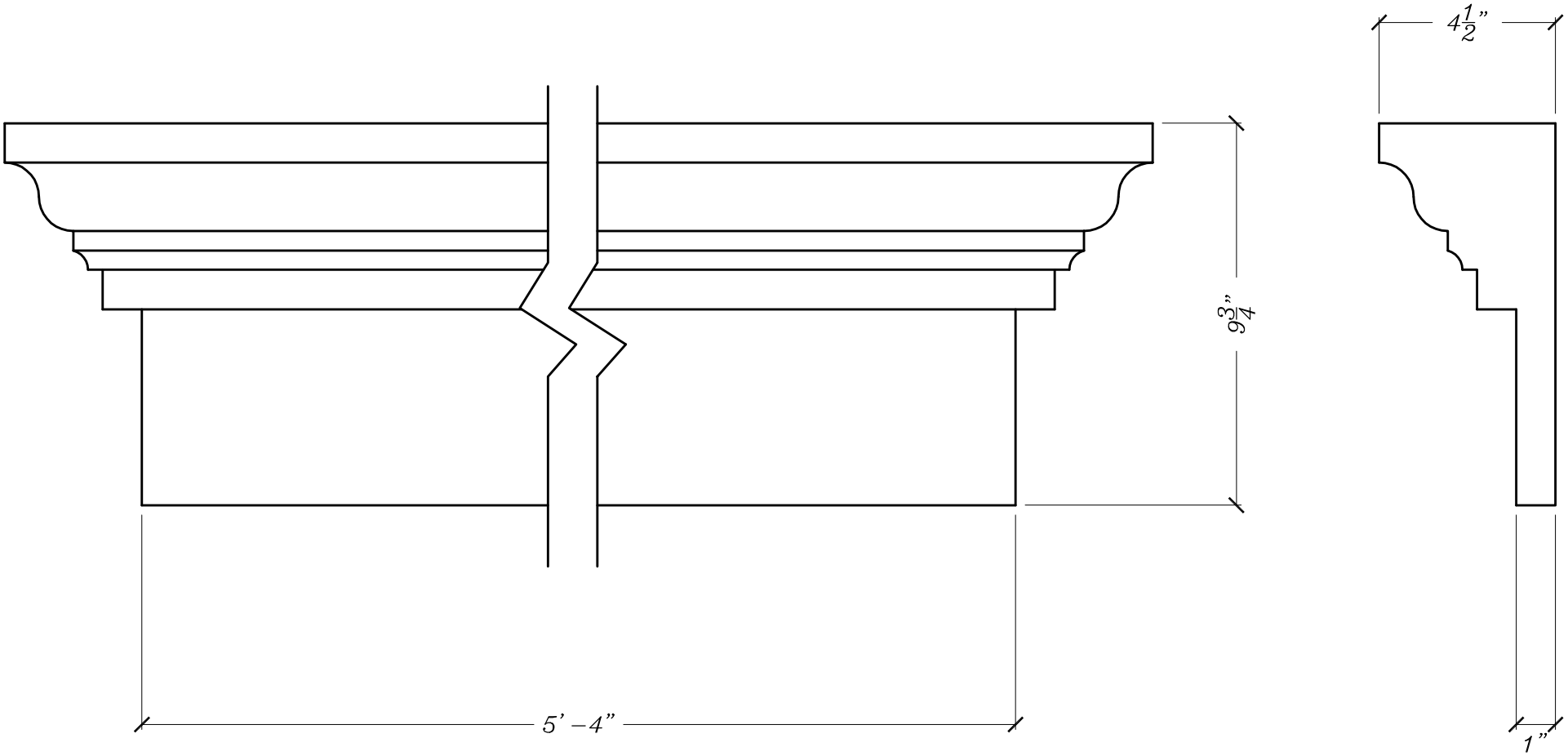

®SPECTIS MOULDERS INC.
1-800-685-9981

NOTES:
1. ALL PRODUCTS ARE DRAWN FOR PRESENTATION PURPOSES, THEREFORE IMAGE MAY VARY SLIGHTLY FROM ACTUAL PART.
2. DRAWING INTENT IS TO INDICATE GENERAL ARRANGEMENT, DESIGN AND INTENT OF WORK IS PARTLY DIAGRAMATIC.
3. SPECTIS RESERVES THE RIGHT TO CHANGE ANY PRODUCT DESIGN WITHOUT NOTIFICATION.

CUSTOMER/PRO. NAME & QUOTE#: STANDARD PRODUCT	TITLE: HEADER	
BILL OF MAT / PART #: CSH 1354-64	SCALE: 1/4" = 1"	DATE: 05/03/30
	DWG BY: JB	REV